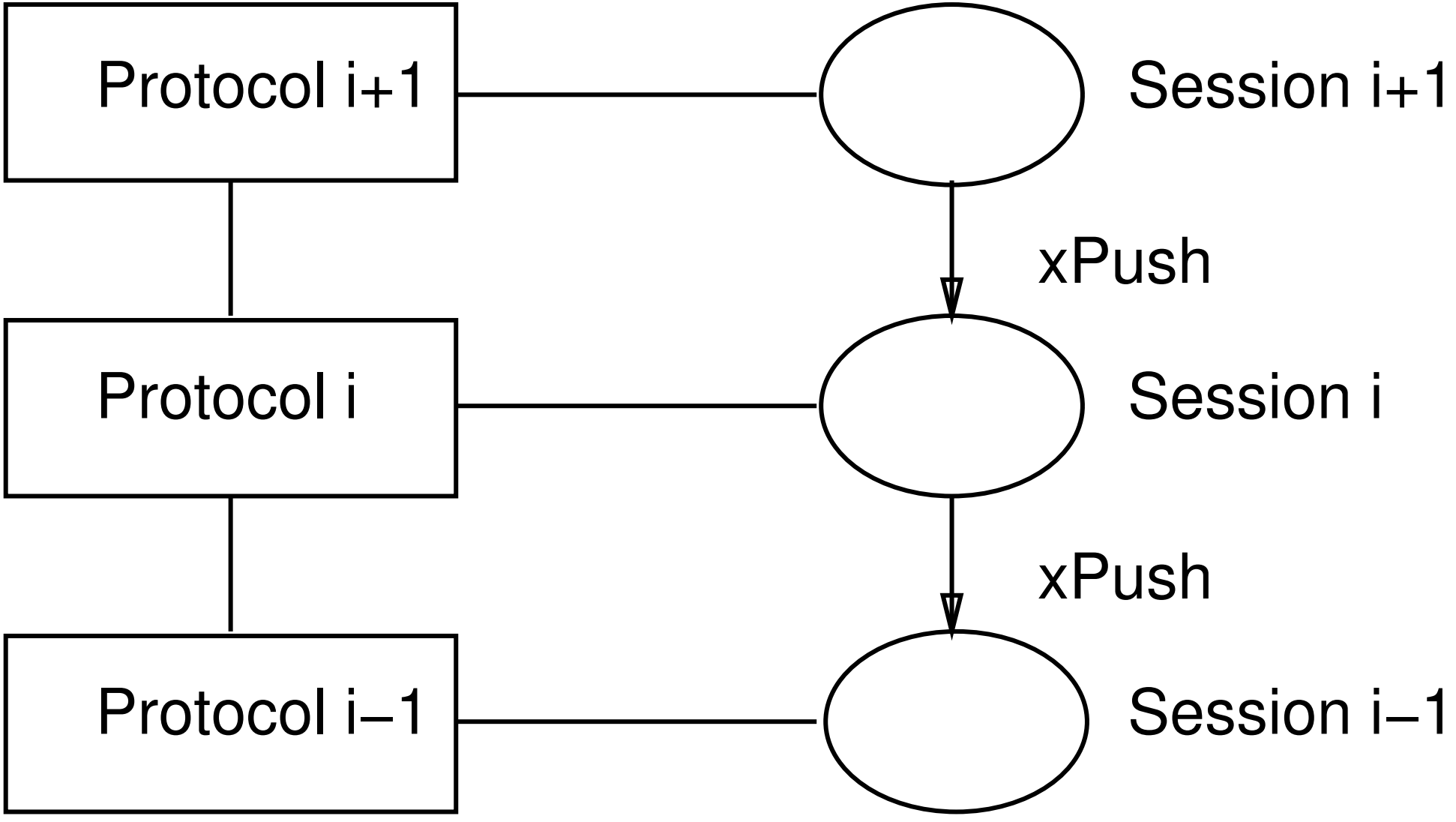
Protocol i+1
Session i+1
xPush
Protocol i
Session i
xPush
Protocol i–1
Session i–1